Cambridge Assessment International Education

Cambridge International AS & A Level

CANDIDATE NAME									
CENTRE NUMBER						CANDIDATE NUMBER				

6945850561

PHYSICS **9702/31**

Paper 3 Advanced Practical Skills 1 **October/November 2021**

2 hours

You must answer on the question paper.

You will need: The materials and apparatus listed in the confidential instructions

INSTRUCTIONS

- Answer **all** questions.
- Use a black or dark blue pen. You may use an HB pencil for any diagrams or graphs.
- Write your name, centre number and candidate number in the boxes at the top of the page.
- Write your answer to each question in the space provided.
- Do **not** use an erasable pen or correction fluid.
- Do **not** write on any bar codes.
- You will be allowed to work with the apparatus for a maximum of 1 hour for each question.
- You should record all your observations in the spaces provided in the question paper as soon as these observations are made.
- You may use a calculator.
- You should show all your working and use appropriate units.

INFORMATION

- The total mark for this paper is 40.
- The number of marks for each question or part question is shown in brackets [ ].

For Examiner's Use	
1	
2	
Total	

This document has **16** pages. Any blank pages are indicated.

© UCLES 2021

You may not need to use all of the materials provided.

1 In this experiment, you will investigate oscillations.

(a) ● Slide the loop of a spring onto a wooden rod. Fix the loop of the spring in the middle of the wooden rod with a clip, as shown in Fig. 1.1.

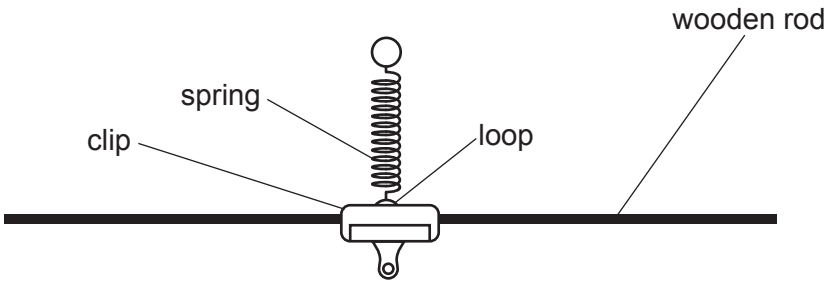

Fig. 1.1

● Use half of the adhesive putty to fix four 10 g masses to the wooden rod as shown in Fig. 1.2.

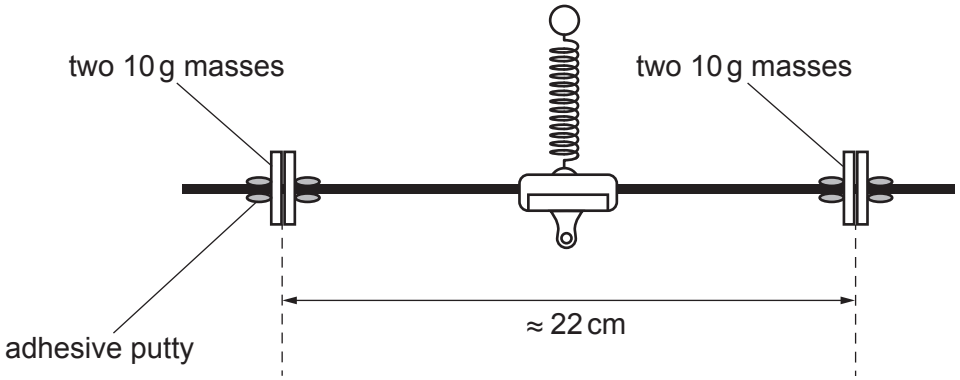

Fig. 1.2

● Adjust the positions of the masses until the distance between the masses is approximately 22 cm. The masses should each be approximately the same distance from the clip, as shown in Fig. 1.2.

© UCLES 2021

- Clamp the loop at the top of the spring between two small wooden blocks.
- Arrange the apparatus as shown in Fig. 1.3.

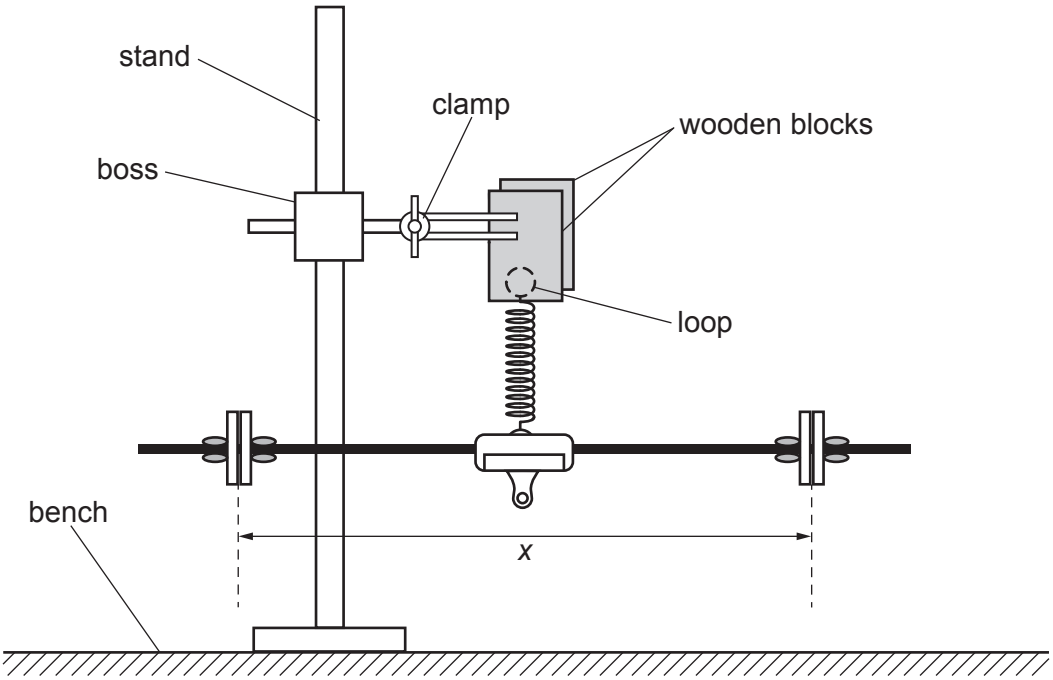

Fig. 1.3

- Adjust the position of the clip until the rod balances approximately parallel to the bench.
- The distance between the masses on the wooden rod is x, as shown in Fig. 1.3.

  Measure and record x.

x = ... [1]

(b)
- Using the other wooden rod, set up a second set of apparatus as shown in Fig. 1.3.
- The distance between the masses on this wooden rod is p.

  Adjust the position of the masses until the value of p is approximately 18 cm.
- Measure and record p.

p = ... [1]

(c) ● Move the apparatus until the two rods are close to each other and in line as shown in Fig. 1.4.

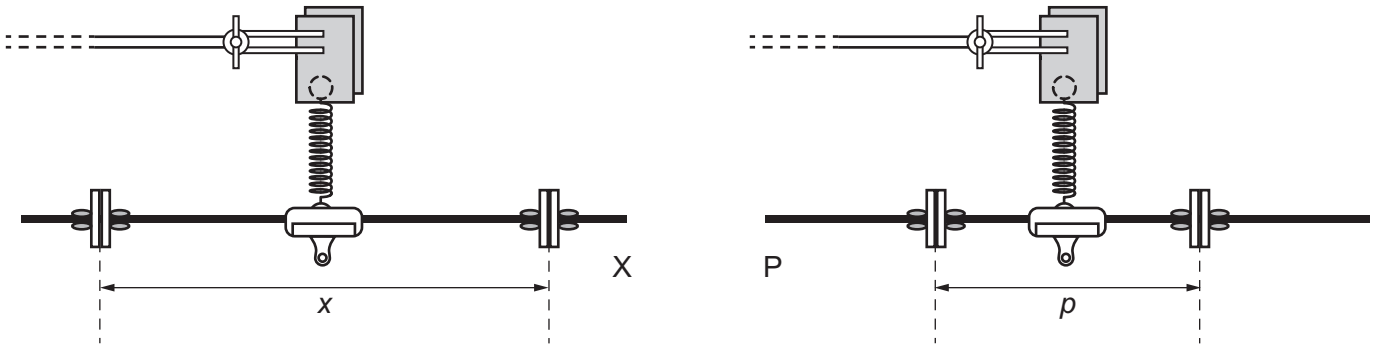

Fig. 1.4

- Gently press the rods down at end X and end P.
- Release the ends at the same time. The ends will oscillate as shown in Fig. 1.5.

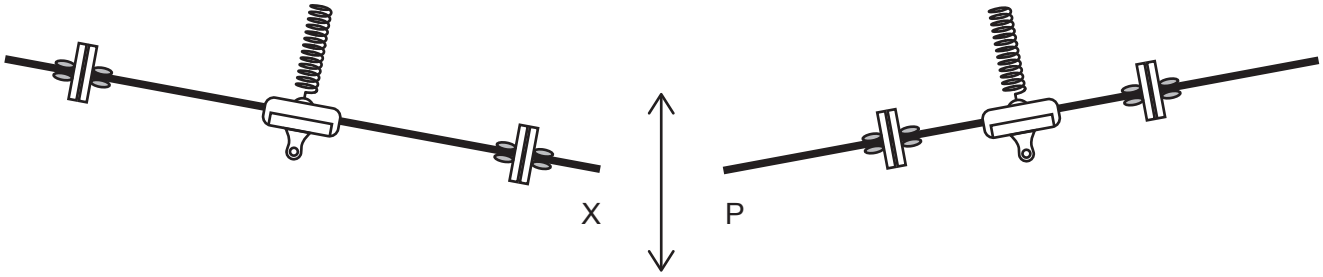

Fig. 1.5

- Watch the oscillations. X and P move in and out of phase.
- Look at P. Count the number *n* of oscillations made by P from release until both ends are back in phase.

n = ... [1]

BLANK PAGE

(d) Change p in the range $14.0\,\text{cm} \leqslant p \leqslant 20.5\,\text{cm}$ and repeat **(c)** until you have six sets of values of p and n.

Keep distance *x* constant.

Record your results in a table. Include values of $\frac{1}{p}$ and $\frac{1}{n}$ in your table.

Record the values of $\frac{1}{n}$ to three significant figures.

[9]

(e) (i) Plot a graph of $\frac{1}{n}$ on the y-axis against $\frac{1}{p}$ on the x-axis. [3]

(ii) Draw the straight line of best fit. [1]

(iii) Determine the gradient and y-intercept of this line.

gradient = ...

y-intercept = ...

[2]

© UCLES 2021

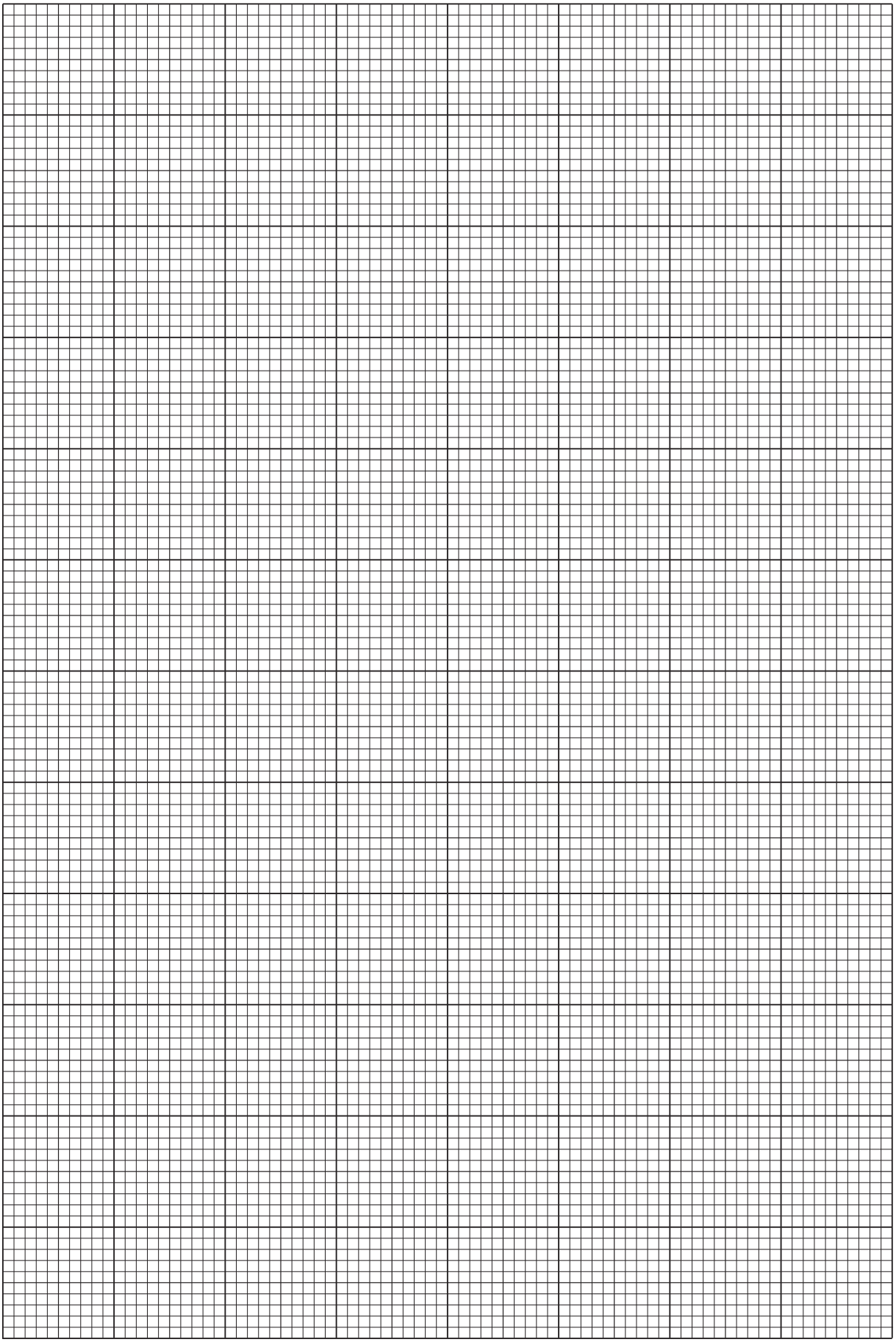

(f) It is suggested that the quantities n and p are related by the equation

$$\frac{1}{n} = \frac{A}{p} + B$$

where A and B are constants.

Using your answers in **(e)(iii)**, determine the values of A and B.
Give appropriate units.

A = ...

B = ...
[2]

[Total: 20]

You may not need to use all of the materials provided.

2 In this experiment, you will investigate the flow of oil.

(a) You have been provided with two straws of the same diameter.

(i) Measure and record the length l of the **shorter** straw.

l = ... [1]

(ii) The diameter D of the straw is shown in Fig. 2.1.

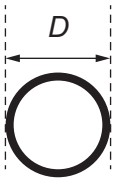

Fig. 2.1

Measure and record D.

D = ... [1]

(iii) Calculate the volume V of the straw using

$$V = \frac{\pi D^2 l}{4}.$$

V = ... [1]

(iv) Justify the number of significant figures that you have given for your value of V.

.....

.....

..... [1]

(b) Draw a circle of radius 2.0 cm on the blank sheet of paper.

(i)
- Place a Petri dish on top of the circle on the paper.
- Use small pieces of adhesive putty at the edge of the Petri dish to secure it to the paper.
- Place a small piece of adhesive putty at the centre of the Petri dish.
- Gently press the straw into the adhesive putty so that the bottom of the straw is sealed by the putty.
- Arrange the apparatus as shown in Fig. 2.2 and Fig. 2.3 with the straw above the centre of the circle drawn on the paper.

TOP VIEW

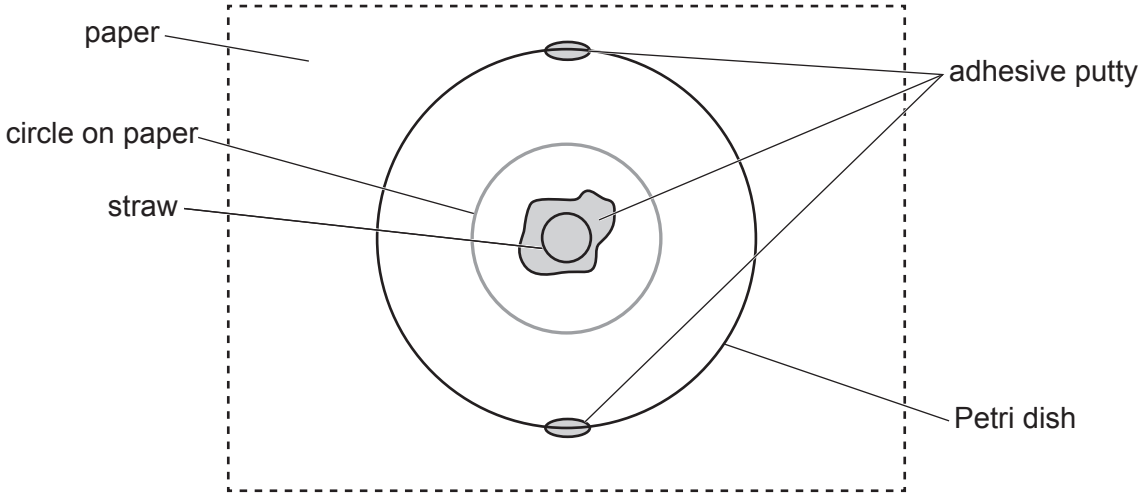

Fig. 2.2

SIDE VIEW

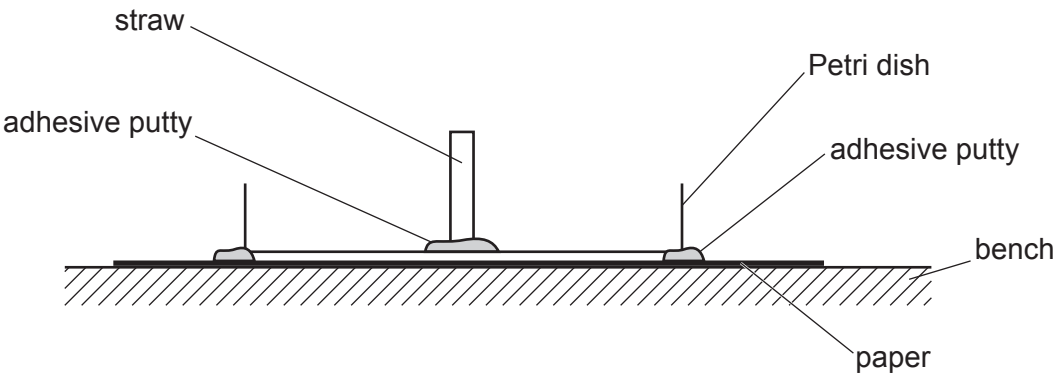

Fig. 2.3

- You have been provided with plastic gloves to wear when handling the oil.

  Use the dropper to fill the straw with oil.

- When the straw is lifted from the putty, the oil spreads out. The time taken for the first part of the oil to reach the circle is *t*.

  Gently lift the straw away from the putty.

- Measure and record *t*.

t = ... [2]

(ii) Estimate the percentage uncertainty in your value of *t*. Show your working.

percentage uncertainty = ... [1]

(c) Repeat **(a)(i)**, **(a)(iii)** and **(b)(i)** using the **longer** straw.

l = ...

V = ...

t = ...
[3]

(d) It is suggested that the relationship between V and t is

$$V = \frac{k}{\sqrt{t}}$$

where k is a constant.

(i) Using your data, calculate two values of k.

first value of k = ...

second value of k = ...
[1]

(ii) Explain whether your results support the suggested relationship.

.....

.....

.....

..... [1]

(e) (i) Describe four sources of uncertainty or limitations of the procedure for this experiment.

1. .....

.....

2. .....

.....

3. .....

.....

4. .....

.....

[4]

(ii) Describe four improvements that could be made to this experiment. You may suggest the use of other apparatus or different procedures.

1. .....

.....

2. .....

.....

3. .....

.....

4. .....

.....

[4]

[Total: 20]

BLANK PAGE

BLANK PAGE

© UCLES 2021

BLANK PAGE

Permission to reproduce items where third-party owned material protected by copyright is included has been sought and cleared where possible. Every reasonable effort has been made by the publisher (UCLES) to trace copyright holders, but if any items requiring clearance have unwittingly been included, the publisher will be pleased to make amends at the earliest possible opportunity.

To avoid the issue of disclosure of answer-related information to candidates, all copyright acknowledgements are reproduced online in the Cambridge Assessment International Education Copyright Acknowledgements Booklet. This is produced for each series of examinations and is freely available to download at www.cambridgeinternational.org after the live examination series.

Cambridge Assessment International Education is part of the Cambridge Assessment Group. Cambridge Assessment is the brand name of the University of Cambridge Local Examinations Syndicate (UCLES), which itself is a department of the University of Cambridge.

© UCLES 2021